2032322
Stationer's Desk

Parts and Hardware List

A.	Top Assembly	1 pc
B.	Right Leg Assembly	1 pc
C.	Left Leg Assembly	1 pc
D.	Back Stretcher	1 pc
E.	Center Stretcher	1 pc
F.	Drawer	1 pc
G.	Wood Plugs	10 pcs
H.	Allen Head Bolts	8 pcs
I.	Lock Washers	8 pcs
J.	Flat Washers	8 pcs
K.	Allen Wrench	1 pc
L.	Wood Screws	8 pcs
M.	Phillips Head Screwdriver	1 pc
N.	Drawer Stops (pre-attached to Drawer)	2 pcs

∗ Please make sure that you have all the parts and hardware indicated above before you begin assembly of this item.
∗ Use the hardware illustrations to determine correct piece and size.
∗ This item should be assembled on a soft surface to prevent scratching the finish during assembly.
∗ This item may require periodic tightening.

Hardware Illustrations

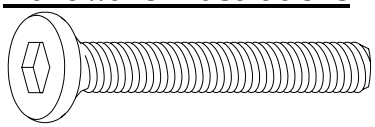

H. Allen Head Bolt

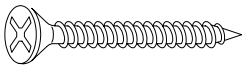

L. Wood Screw

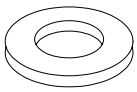

J. Flat Washer

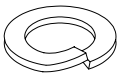

I. Lock Washer

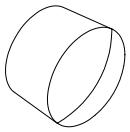

G. Wood Plug

2032322
Stationer's Desk

Attach Stretchers

Parts required

D.	Back Stretcher	1 pc	L.	Wood Screws	2 pcs
E.	Center Stretcher	1 pc	M.	Phillips Head Screwdriver	1 pc

1. **Attach Back Strether (D) with Center Stretcher (E)** Insert the dowel of the Center Stretcher (E) into the middle hole of the Back Stretcher (D) and align the pre-drilled holes in the Back Stretcher (D) with pre-drilled holes in the Center Stretcher (E). Secure with Wood Screws (L) by using Phillips Head Screwdriver (M). See Illustration #1.

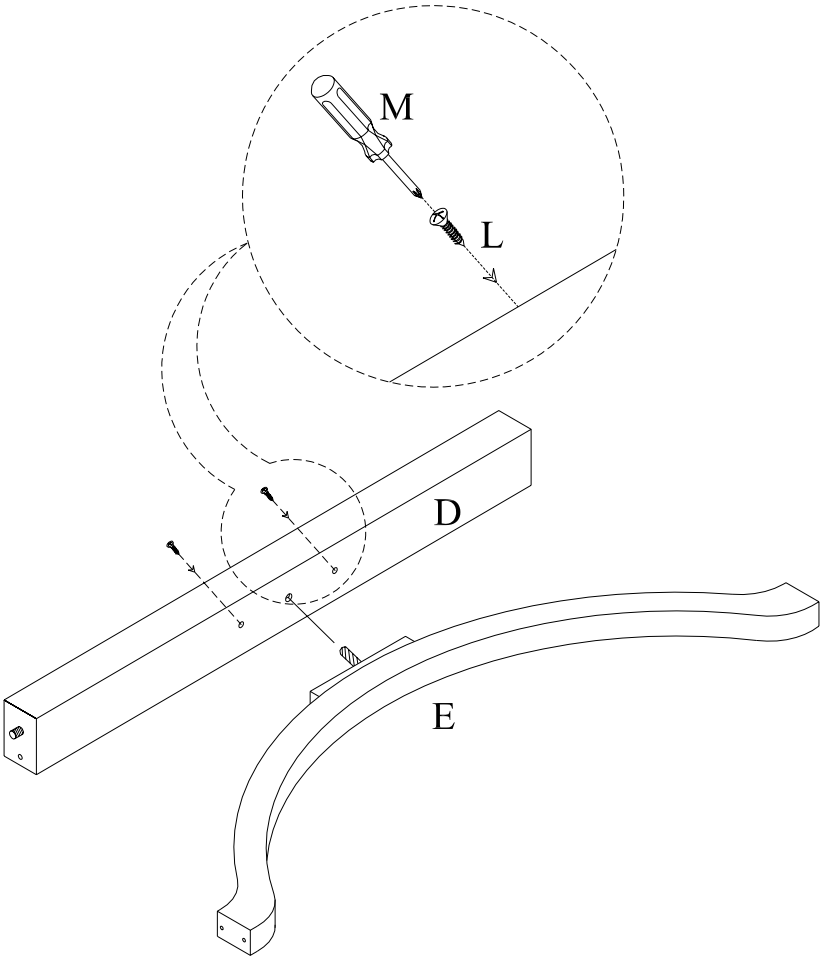

Illustration #1

2032322
Stationer's Desk

Attach Leg Assemblies with Stretchers

Parts required

B.	Right Leg Assembly	1 pc	E.	Center Stretcher	1 pc
C.	Left Leg Assembly	1 pc	L.	Wood Screws	6 pcs
D.	Back Stretcher	1 pc	M.	Phillips Head Screwdriver	1 pc

2. **Attach Leg Assemblies (B,C) with Stretchers (D,E)** Align the pre-drilled holes in the Back Stretcher (D) and Center Stretcher (E) with pre-drilled holes in the Right, Left Leg Assemblies (B,C). Make sure the dowels of the Back Stretcher (D) insert into the holes in Leg Assemblies (B,C). Secure with Wood Screws (L) by using Phillips Head Screwdriver (M). See Illustration #2.

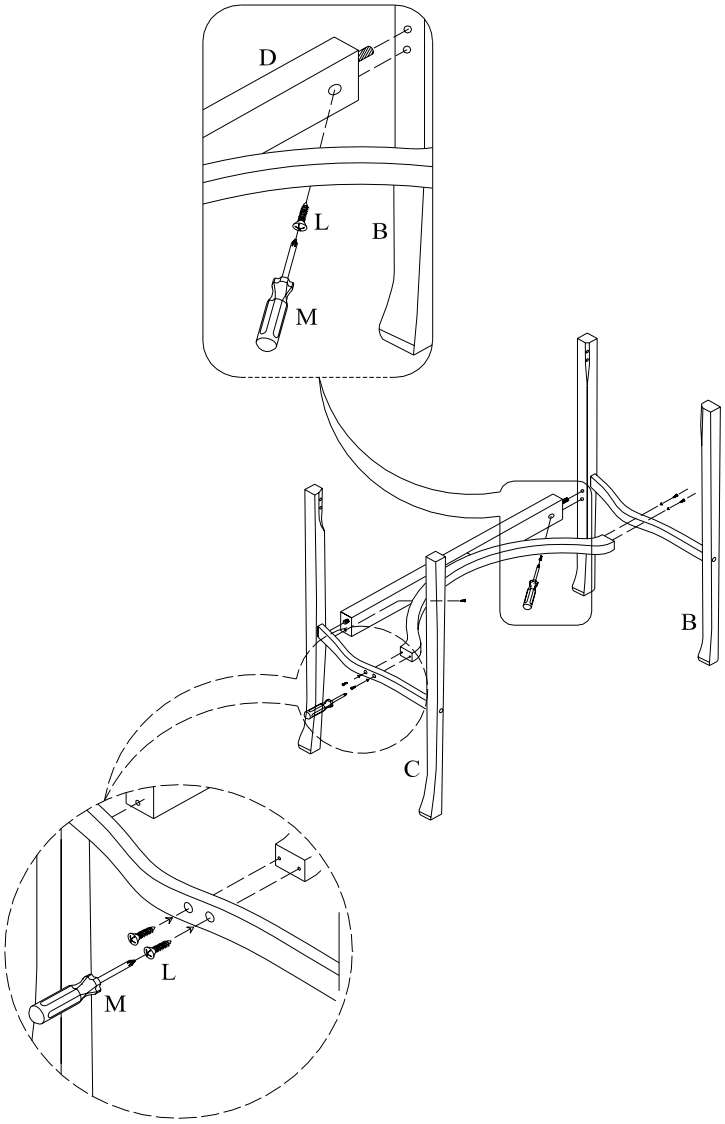

Illustration #2

2032322
Stationer's Desk

Attach Top Assembly with Leg Assemblies

Parts required

A.	Top Assembly	1 pc	I.	Lock Washers	8 pcs
B.	Right Leg Assembly	1 pc	J.	Flat Washers	8 pcs
C.	Left Leg Assembly	1 pc	K.	Allen Wrench	1 pc
F.	Drawer	1 pc	N.	Drawer Stops	2 pcs
H.	Allen Head Bolts	8 pcs			

3. **Remove Drawer (F) from Top Assembly (A)** Set the Top Assembly (A) upside down on a soft surface. Press Drawer Stops (N) inward from outside of Drawer (F). Carefully slide the Drawer (F) out and remove. See Illustration #3.
4. **Attach Top Assembly (A) with Leg Assemblies (B,C)** Align the pre-drilled holes in the corner blocks between aprons of the Top Assembly (A) with the pre-threaded holes in the Right, Left Leg Assemblies (B,C). Secure with Allen Head Bolts (H), Lock Washers (I), and Flat Washers (J) by using Allen Wrench (K). See Illustration #3.

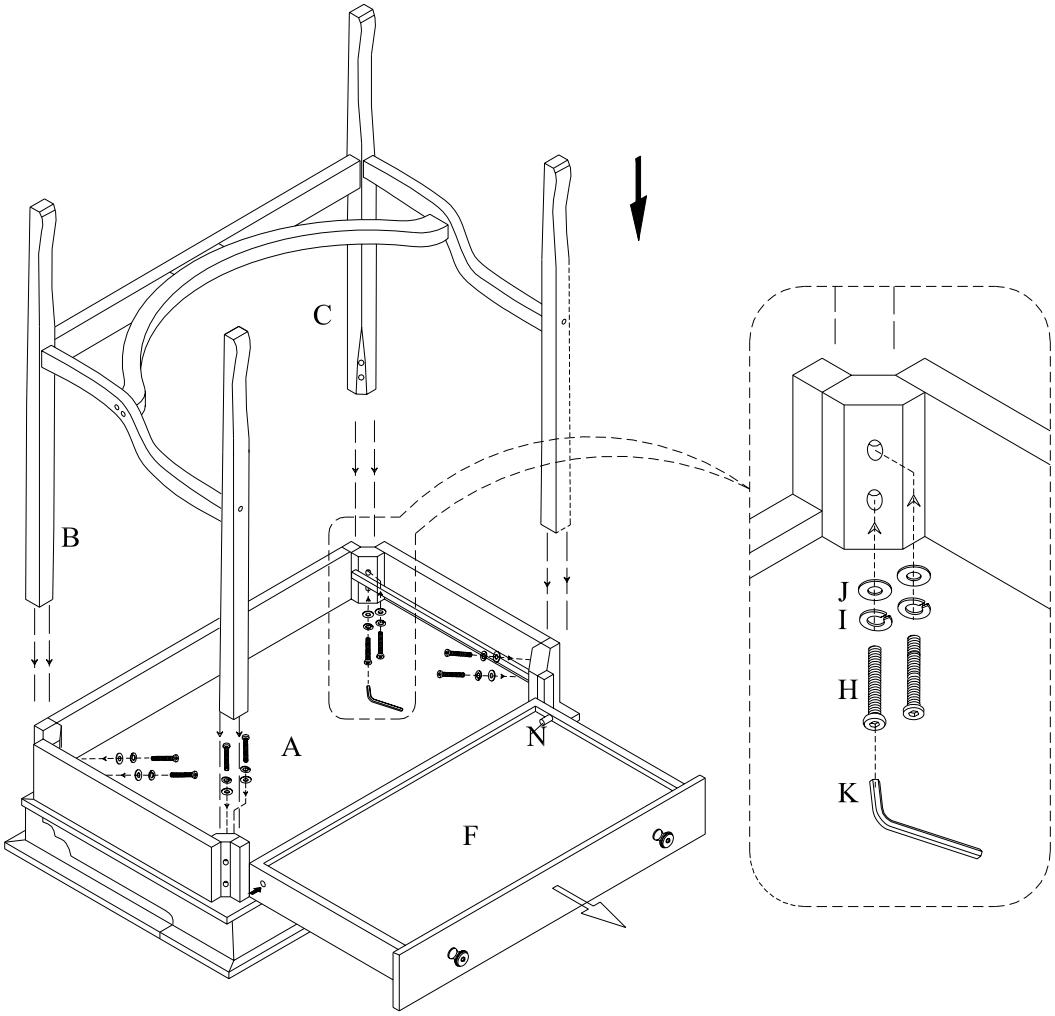

Illustration #3

2032322
Stationer's Desk

Install Drawer & Wood Plugs

Parts required

A.	Top Assembly	1 pc	F.	Drawer	1 pc
G.	Wood Plugs	10 pcs	N.	Drawer Stops	2 pcs

5. **Install Drawer (F)** Place the Drawer (F) into the Top Assembly (A) and push the Drawer Stops (N) outward of Drawer (F). See Illustration #4.
6. **Install Wood Plugs (G)** Cover holes with Wood Plugs (G) and press into place. See Illustration #4.

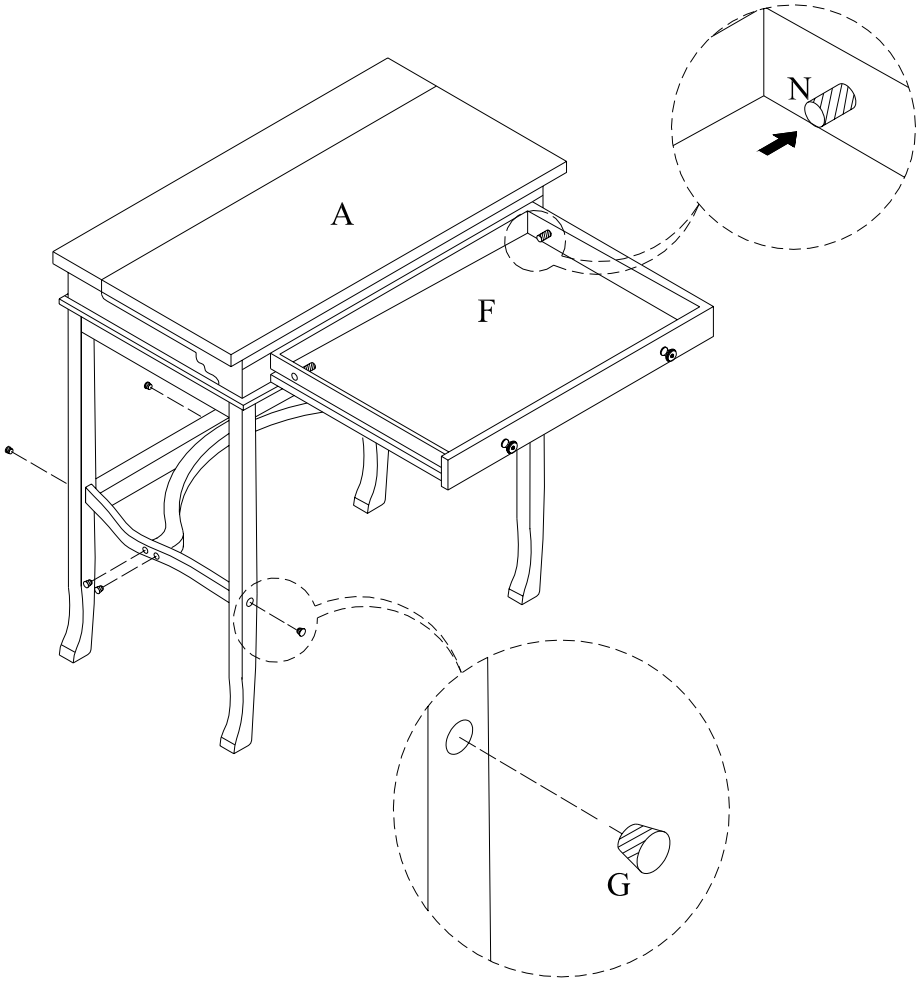

Illustration #4